SWISS TIMING

User's Manual

CONCEPT ARES 21

AQUATICS

3330.502.02

Version 3.1

Edition March 2008

TABLE OF CONTENTS

P.O. Box 138, rue de l'Envers 1
2606 Corgémont, Switzerland
www.swisstiming.com

Phone +41 32 488 36 11
Fax +41 32 488 36 09
info@swisstiming.com

1 INTRODUCTION

1.1 Extract from the book Time by Swatch, published on the occasion of the Atlanta Olympic Games

An innovation of unparalleled significance in the history of the Olympic Games is without doubt the new technology of Chronomatics introduced by Swatch Timing in the shape of the ARES 21 concept (Advanced Results Entry Station). It will be applied, among others, to the four main water sports: Swimming, Synchronized Swimming, Diving and Water Polo.

Chronomatics - a revolution!

As a historical premiere at the Atlanta Olympic Games, Swatch Timing introduces its new instrument, the ***ARES 21 electronic printer-timer****, the result of a marriage between Chronography and Computer Technology. The ARES 21 sports programs simultaneously load both the timing interface and the PC operating system. The result is a fusion between timing and data processing.*
The ARES 21 can be compared to the armadillo. While the competition is taking place, the ARES 21 shrinks inside its armor along with its intelligent interface to catch instant moments. Working in complete isolation, it captures and protects the logbook of events. When the log is completed, the ARES 21 pokes out its head and feet once again and, with the flexibility and user-friendliness of computer technology, provides the awaited information almost immediately to the exterior (via giant public screen, to the media, or the main server) while providing no possibility to modify the information that was protected by its armor.

With Chronomatics the era of handwritten annotation is over.

At the Olympic Games today each judge uses a microterminal in order to render his verdict. In a first phase, with no possible external influence, Chronomatics records data and calculates results; and in a second phase, brings this information to the competitors and the public via the local data handling server, in what amounts to real time.

With Chronomatics, Swatch Timing puts the accent on its mission of integrity and ethics in time measurement.

During swimming competitions for example, the operator will no longer have to keep memorizing the configurations of the installations, the competitors' numbers etc. in order for him to link them mentally with the electronic chronograph (timer) later on. From now on, the ARES 21 takes over for him. Therefore, at the Olympic Games, the Swatch Timing operator can consult his screen to get a global vision of the competition, and hold command of events in real time.

1.2 Introduction

The ARES 21 is the fusion of chronography and computer technology. The heart of the system is the IF ARES, which is in direct communication with the time captors and the information peripherals. It protects and conserves the logbook of events. Concept protected by Patent No. 5.852.797.

Because there is no hardware interface to be installed in the PC, the ARES 21 concept will always keep pace with the evolution of computer technology.

The architecture of the IF ARES consists of a fixed central unit and a movable module adapted to the sport to be measured.

For all aquatic sports the module is the same, e.g. Swimming, Diving, Synchronized Swimming and Water Polo. For other sports the module is interchangeable.

2 CONCEPT

The concept consists of the following component options:

- A printer of events connected to the IF ARES. Its purpose is to guarantee the authenticity of the data transmitted from the PC.
- A single or double battery power supply (UP ARES). For security purposes the battery charger(s) are not integrated in the power supply. Therefore there are no high voltage components in the interface unit which is connected to the time captors.
- A switching rack (DS ARES) interconnects two systems operating in parallel. Its architecture is similar to that of the IF ARES: a central unit and an interchangeable module which is the same for all aquatic sports. The functions of the DS ARES are:
- Back-up of the start impulse with direct access to one of the IF ARES units. This ensures that the start impulse will function even if the main power supply fails.
- Switching of output data to scoreboards, television, data handling, etc.
- Back-up input channel for the chain of microterminals (OMT) used by diving and synchronized swimming judges.
- Supplementary power for extra long OMT chains.

3 DESCRIPTION

The **ARES 21 - Water Sports** concept is a timing system which allows base data to be processed in a way that satisfies the increasingly tougher requirements of swimming and water sports clubs.

4 PRECAUTIONS

To prevent any risk of damage, repairs must be done by qualified personnel.

5 MAINTENANCE

In order to assure the viability and longevity of your ARES 21 timing system, the following precautions should be taken:

- Protect the IF ARES from heat and direct exposure to the sun by using a sunshade.
- Protect the IF ARES from humidity and water sprays by keeping it away from the starting blocks or by using a protective waterproof cover.
- Shut down the system and all its components before plugging and unplugging cables (except when connecting a back up power supply).
- Clean the IF ARES after every competition and dry it before storing in an adequately protected location.

6 CONNECTIONS

Before the ARES 21 timing system can be used, a power supply and the link to the control PC must be connected. Other connections depend on the specific sport and on the peripherals being used.

To connect the ARES 21 system, refer to the installation diagram of the pool. When using a DS ARES, ensure that it is connected properly to the main components (**Main**) and the backups (**Bu**).

6.1 Powering

Connect a UP ARES (or any 12 volt battery) to the **12V DC main** terminal. The second power supply of the UP ARES (or an external battery) can be connected to the **12V DC bu** (backup) terminal. The IF ARES uses the **main** power supply as long as the voltage is sufficient, then switches to the '**bu**' (backup) power supply.

⇨ **Ensure correct battery polarity**.

One of the two batteries can be disconnected for replacement at any time without interfering with the operation of the system, even during an actual timing.

⇨ **The battery charger must be disconnected before connecting the battery of the IF ARES.**

6.2 PC

Connect the **PC** terminal of the IF ARES to one of the serial ports (COMx) of the PC, using a 9051-1306 cable. Configure the serial port with the software.
If the computer is equipped with 25 pin terminals only, use the 9-25 pin adapter included.

6.3 Scoreboard

Connect the **SCB** terminal of the IF ARES to the scoreboard (use cable 3330-617 for an UNT4 and 1901.100 for Calypso and Piccolo) or to the **SCB main/bu** terminal of the DS ARES.

6.4 Data Handling

Connect the **GP** (General Purpose) terminal of the IF ARES to the data handling unit or to the **GP main/bu** terminal of the DS ARES.

6.5 Control Printer

Connect the control printer to the **PRN** terminal of the IF ARES by using the delivered cable.

6.6 Start System (Swimming)

Connect the **START** terminal of the IF ARES to the start system (StartTime 3399.900) or the **START main/bu** terminal of the DS ARES.

6.7 Harness (Swimming)

Place the harness modules in front of each lane (the module number must correspond to the lane number). Connect the input interfaces (touchpads, start blocks, hand contacts) to the harness modules. Connect the harness modules with each other by using inter-module cables. Finally, connect the nearest module to the **HA1** and/or **HA2** terminal of the IF ARES by using a 1865.025 cable. The pool setup is configured by the software.

6.8 Judges'Microterminals

Water Polo, Diving, Synchronized Swimming

Connect the **OMT** terminal of the IF ARES to the nearest microterminal with a 3330-605 cable. Connect the microterminals to each other. When a DS ARES is used, connect the **OMT** terminal of the IF ARES to the **OMT main/bu** terminal of the DS ARES.

6.9 START/STOP (Water Polo)

Connect the START/STOP unit (**START** and **COMMUN** terminals) to the **L1** terminal of the IF ARES. The polarity does not matter as long as the **STOP** connection is not used; otherwise, connect the **COMMUN** terminal to the red **L1** terminal and the **START** and **STOP** terminals to the black **L1** and **L2** terminals respectively. When a DS ARES is used, connect the **L1** terminals to the **L main/bu** terminals of the DS ARES (the polarity does not matter).

6.10 Horn (Water Polo)

Connect the horn to the **SYNC OUT** terminals of the IF ARES. These are floating terminals (normally open).

6.11 Hand Contacts (Synchro) (Water Polo: Reset 35")

Connect the hand contacts to the **L1, L2** and **L3** terminals of the IF ARES. When a DS ARES is used, connect one of the **Lx** terminals of the IF ARES to the **L main/bu** terminal of the DS ARES and one of the hand contacts to the **L** terminal of the DS ARES. The **Lx** terminals are configured with the software.

7 SOFTWARE: INSTALLATION

You can find in our Web site (www.swisstiming.com) information about last software versions for each sport.

After correctly setting up the connections, the respective software must be loaded to the system. The IF ARES is delivered with a core program which includes the base instructions for initializing the data transfers.

A complete installation consists of:

- Installing the data transfer (download) programs on the computer
- Transferring the modules to the IF ARES
- Installing the sport specific user interface on the computer

7.1 Definitions

Explanation of certain terms used in this document:

Program Software for the computer (PC)
Module Software for the IF ARES

7.2 Download

In **Windows,** ensure that you have quit all other running programs to prevent conflicts when transferring shared libraries.

Insert the **CD** in the disk drive and issue the **a: setup** command (Windows 3.11: menu **FILE - Run...**, Windows 95 / 98 / NT and XP: **Start - Run**).

Follow the on screen instructions...

The last versions of users manuals for each sport are provided for free in our Web site (www.swisstiming.com) in section ARES Download.

The data transfer program is installed on the hard disk and an icon is set on the Windows interface (Download).

If the IF ARES is running an application (the LED is flashing), terminate the interface and restart it (the LED stays lit). Start the Download program...

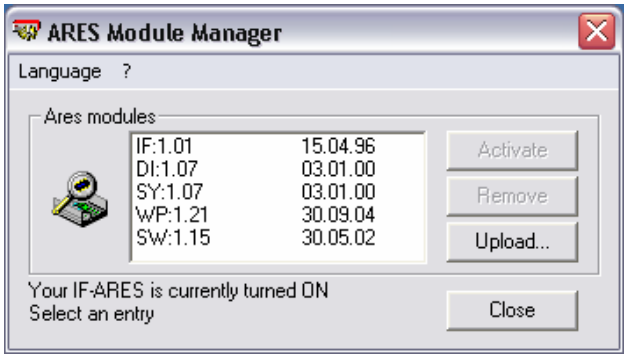

Modules

IF	Base, always loaded
SW	Swimming
WP	Water polo
DI	Diving
SY	Synchronized swimming

The program opens a window on the screen. When the connection has been successfully established, the current modules loaded on the IF ARES with their name, version and date are displayed.

Insert the disk with the sports specific module (for example: Swimming) in the disk drive, then click on the **Load** button. Select the file of the module to be transferred. Note the transferable files have the extension **.A20**.
Confirming the file is to be opened starts the data transfer. A progress bar shows the progress of the transfer. Finally, the IF ARES confirms the successful data transfer.
Note that the IF ARES refuses a data transfer if the particular module is already loaded. If a new version of the module is to be transferred, the old one must be removed first. Select the radio button of the module and then click on the **Remove** button.

The **Activate** button allows you to verify that the module will start correctly (the LED on the front panel of the IF ARES flashes).

7.3 Swimming

The Swimming package consists of the CD **SWIMMING #1 of 1** and the **PRINTS #1 of 1**. The programs on these two disks allow the processing of swimming competitions.

Install the 1 CD on the hard disk (**a:setup**).

Start the **Swimming** program.

⇨ A Help explaining the available functions in depth is provided with the program.
This Help can be printed with the appropriate Windows utilities.
The last user manual is provided for free in our web site (www.swisstiming.com) in the ARES Download section.

At the end of a race, the function **End of race** transmits the information regarding the current race to the **PRINTS** program (if the function **Print Program** is activated), which processes and prints the current race on the system printer.

7.4 Waterpolo

The Water Polo package consists of the CD **WATERPOLO #1 of 1** and the **PRINTS #1 of 1** (the same as in the Swimming package).

Install the 1 CD on the hard disk (**a: setup**).

Start the **Waterpolo** program.

⇨ A Help explaining the available functions in depth is provided with the program. This Help can be printed with the appropriate Windows utilities.

The last user manual is provided for free in our web site (www.swisstiming.com) in the ARES Download section.

7.5 Diving

The Diving package consists of the CD **DIVING #1 of 2** and **DIVING #2 of 2**. The program on this CD allows the processing of diving competitions.

Install the 1 CD on the hard disk (**a:setup**).

Start the **Diving** program.

⇨ A Help explaining the available functions in depth is provided with the program. This Help can be printed with the appropriate Windows utilities.

The last user manual is provided for free in our web site (www.swisstiming.com) in the ARES Download section.

7.6 Synchronized swimming

The Synchro package consists of the CD **SYNCHRONIZED SWIMMING #1 of 1.** The program on this CD allows the processing of synchronized swimming competitions.

Install this CD on the hard disk (**a:setup**).

Start the **Synchronized swimming** program.

⇨ A Help explaining the available functions in depth is provided with the program. This Help can be printed with the appropriate Windows utilities.

The last user manual is provided for free in our web site (www.swisstiming.com) in the ARES Download section.

8 PROTOCOL

Last versions of documents defining the output protocols of the ARES (SCB and GP) are provided for free in our Web site (www.swisstiming.com) in section ARES Download.

9 APPENDIX A: CABLING DIAGRAMS

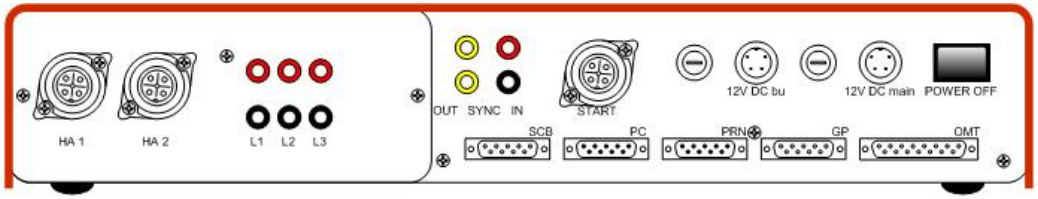

HA1:4PFT		HA2:4PFT		START:4PFT		12V bu:4PMT		12V MAIN:4PMT	
1	HA1+	1	HA2+	1	READY-	1	+12V	1	+12V
2	HA1-	2	HA2-	2	START+	2	GND	2	GND
3	HA1+	3	HA2+	3	START IN	3		3	
4	HA1-	4	HA2-	4	READY+	4		4	

SCB:Sub-D 9PFT RS422/CL		PC:Sub-D 9PMT RS232		PRN:Sub-D 9PMT RS232		GP:Sub-D 9PFT RS422		OMT:Sub-D 15PFT	
1		1		1		1		1	-12Vmt
2		2	RxD	2	RxD	2	RxD+	2	+12Vmt
3	TxD-	3	TxD	3	TxD	3	TxD+	3	
4	TxD+	4	DTR	4	DTR	4	GND	4	LD+
5		5	GND	5	GND	5		5	RxD-
6		6		6		6	RxD-	6	
7	GND	7	RTS	7	RTS	7	TxD-	7	
8	CL-	8	CTS	8	CTS	8	GND	8	
9	CL+	9		9		9		9	-12Vmt
	SHIELD		SHIELD		SHIELD		SHIELD	10	+12Vmt
								11	LD-
								12	
								13	RxD+
CL = Current Loop 20mA								14	GND
								15	

09.12.2005 MCr

ARES 21 **IF ARES** / AQUATICS Connections 3330.502 Fig. 1

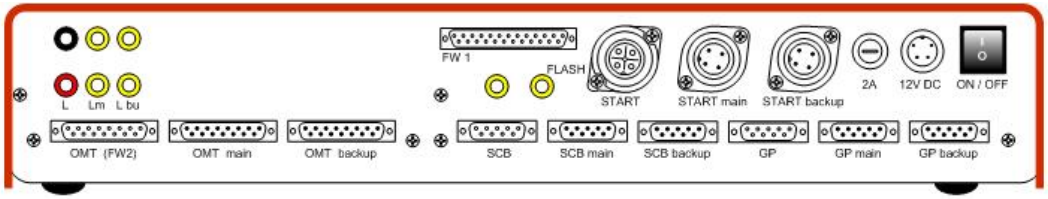

START:main+bu Tuchel 4PMT		START Tuchel 4PFT		12V main:Tuchel 4PMT		SCB:Sub-D 9PFT		SCB main+SCB bu: Sub-D 9PMT	
1	READY -	1	READY -	1	+12V	1		1	
2	STARTI +	2	STARTI +	2	GND	2		2	
3	START IN	3	START IN	3		3	TxD-	3	RxD-
4	READY +	4	READY +	4		4	TxD+	4	RxD+
						5		5	
						6		6	
						7	GND	7	GND
						8	CL-	8	CL-
						9	CL+	9	CL+
							SHIELD		SHIELD

GP main+GP bu: Sub-D 9PMT		GP Sub-D 9PFT		OMT (FW2): Sub-D 15PFT		OMT main+OMT bu: Sub-D 15PMT	
1		1		1	-12Vmt	1	-12Vmt
2	TxD+	2	RxD+	2	+12Vmt	2	+12Vmt
3	RxD+	3	TxD+	3		3	
4	GND	4		4	LD+	4	LD+
5		5		5	Rx-	5	Rx-
6	TxD-	6	RxD-	6		6	
7	RxD-	7	TxD-	7		7	
8	GND	8	GND	8		8	
9		9		9	-12Vmt	9	-12Vmt
	SHIELD		SHIELD	10	+12Vmt	10	+12Vmt
				11	LD-	11	LD-
				12		12	
				13	Rx+	13	Rx+
				14	GND	14	GND
				15		15	
					SHIELD		SHIELD

LD = Line Driver
RS 422

09.12.2005 MCr

ARES 21 **Data Switcher ARES** / Connections 3330.502 Fig. 2

DOUBLE
POWER SUPPLY

Including power cable(s)
IF ARES

12V DC:4PFT		CHARGER:3PMT		12V DC:4PFT		CHARGER:3PMT	
1	+12V	1	+12V	1	+12V	1	+12V
2	GND	2	GND	2	GND	2	GND
3		3		3		3	
4				4			

09.12.2005 MCr

ARES 21 Power Supply ARES / Connections 3330.502 Fig. 3

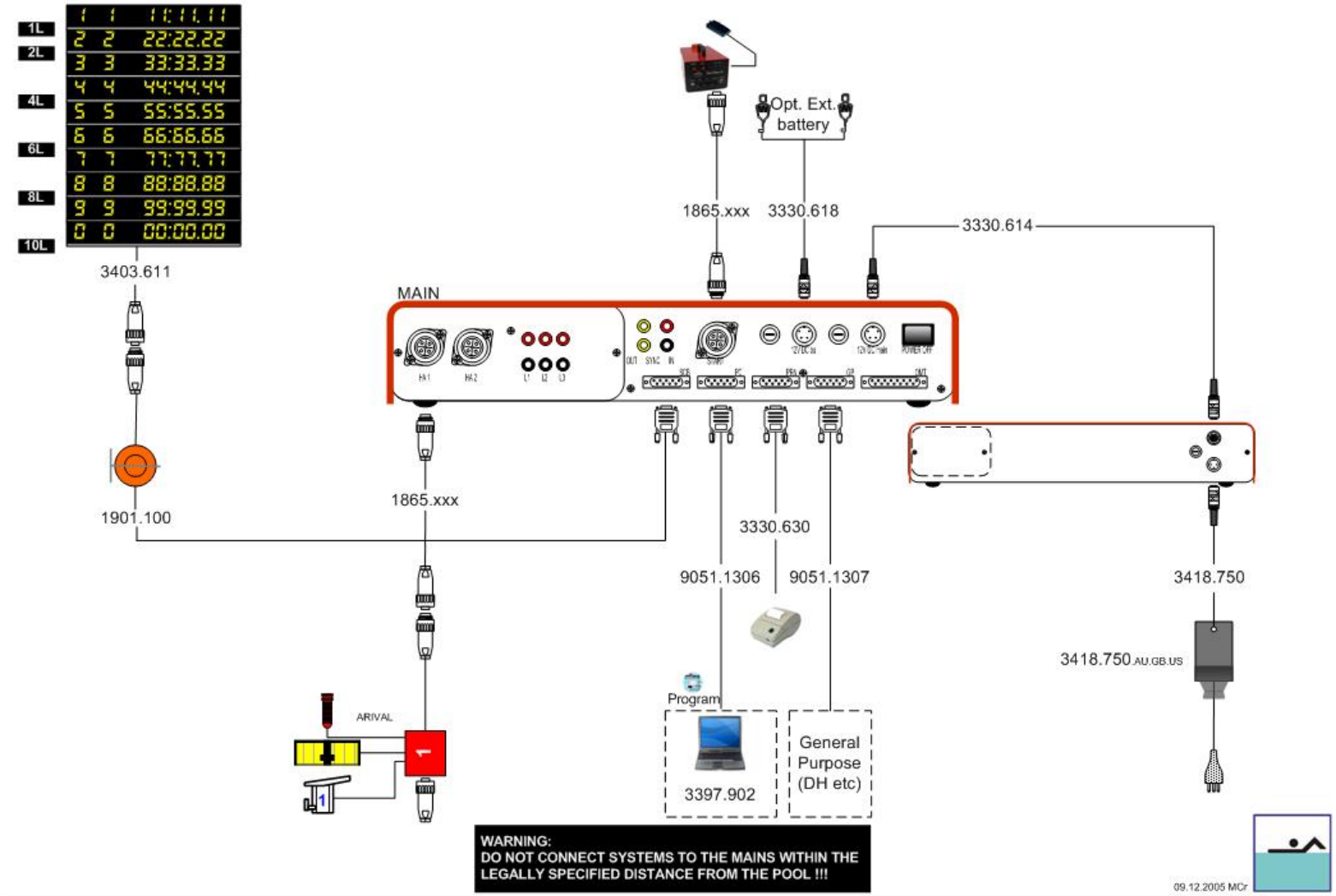

ARES 21 MOBILE SWIMMING LEVEL 1 (A1) 3330.502 Fig. 4

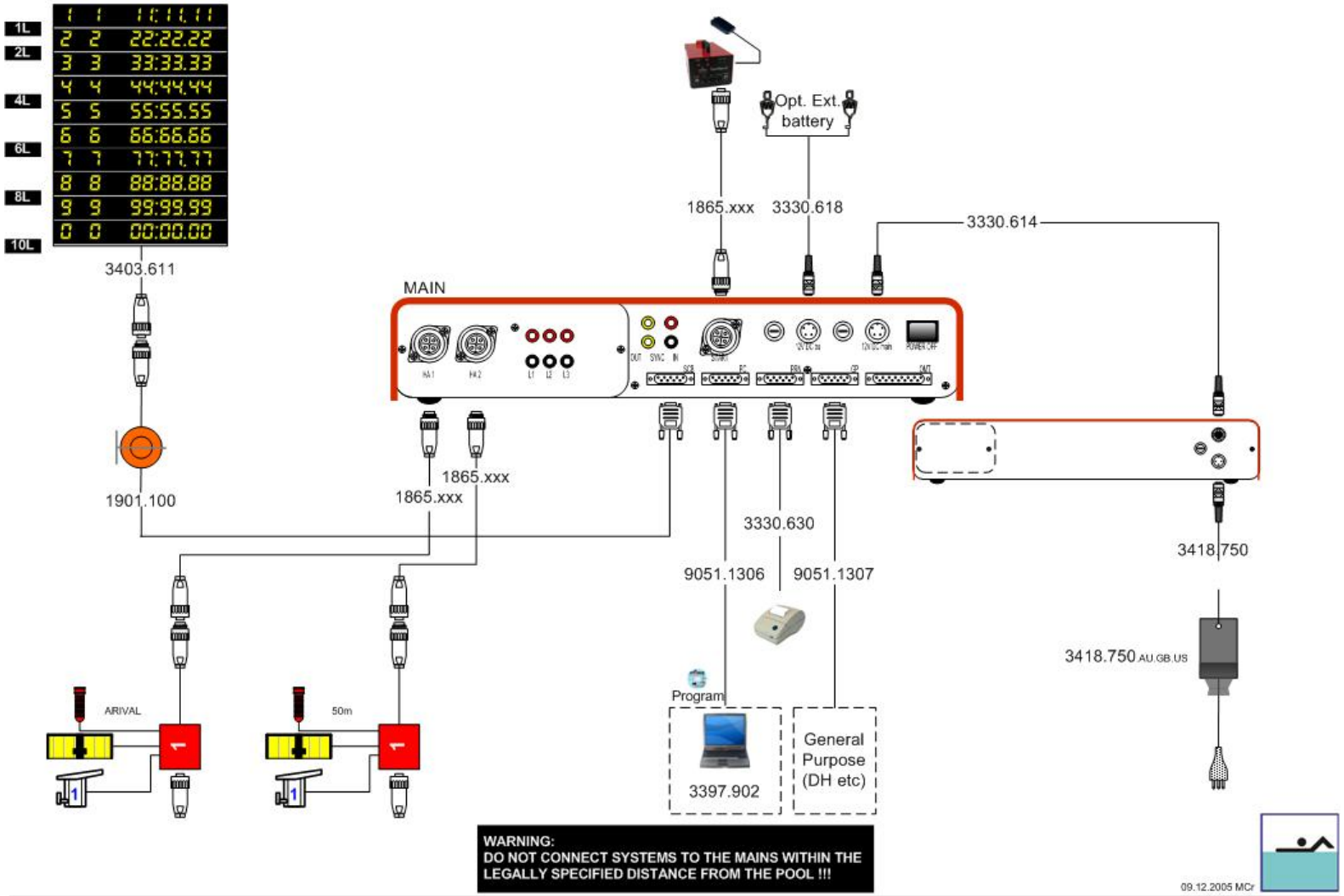

ARES 21 MOBILE SWIMMING LEVEL 2 (A1+50m) 3330.502 Fig. 5

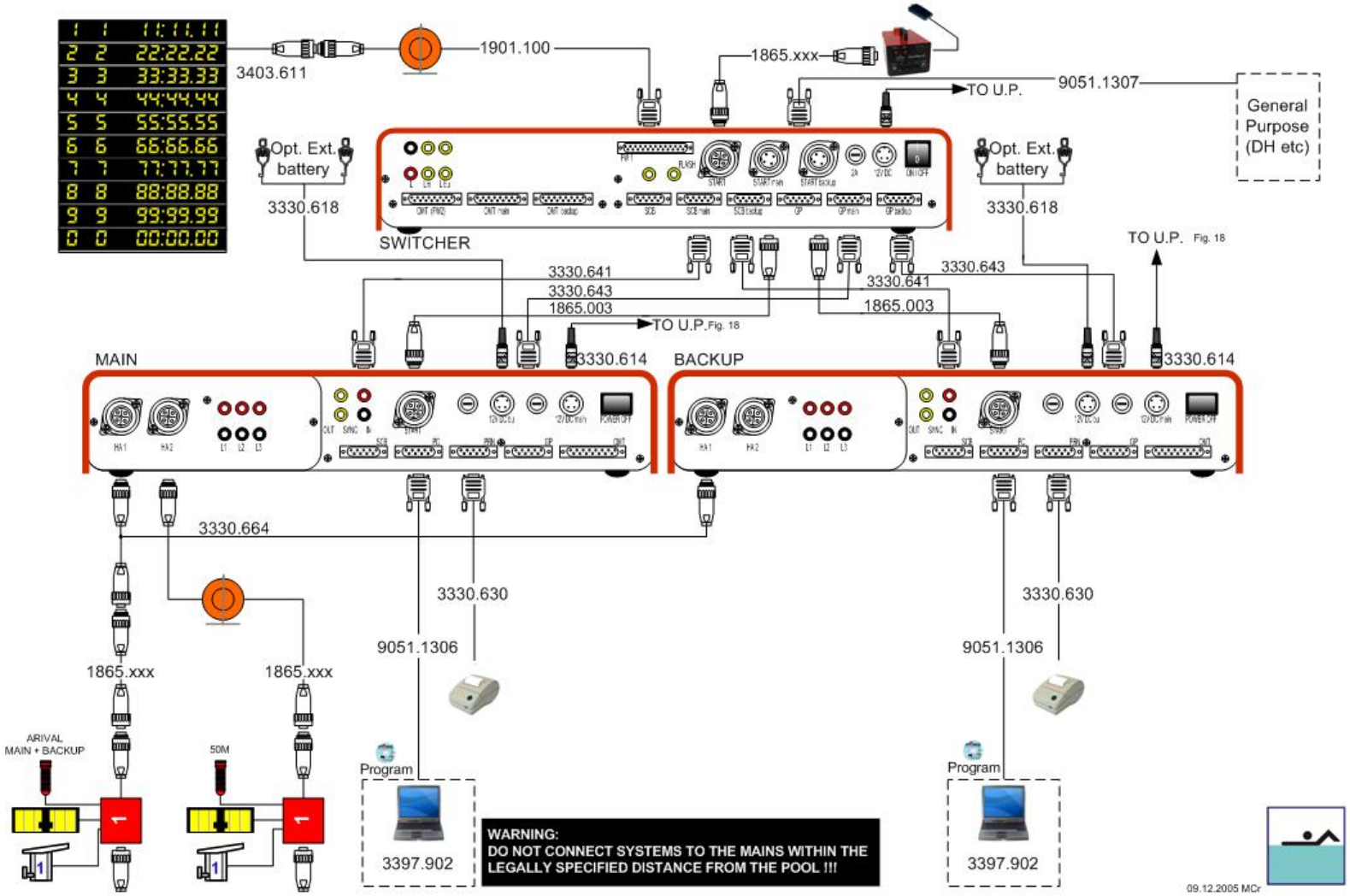

ARES 21 MOBILE SWIMMING LEVEL 3 (A1+A2+50m) 3330.502 Fig. 6

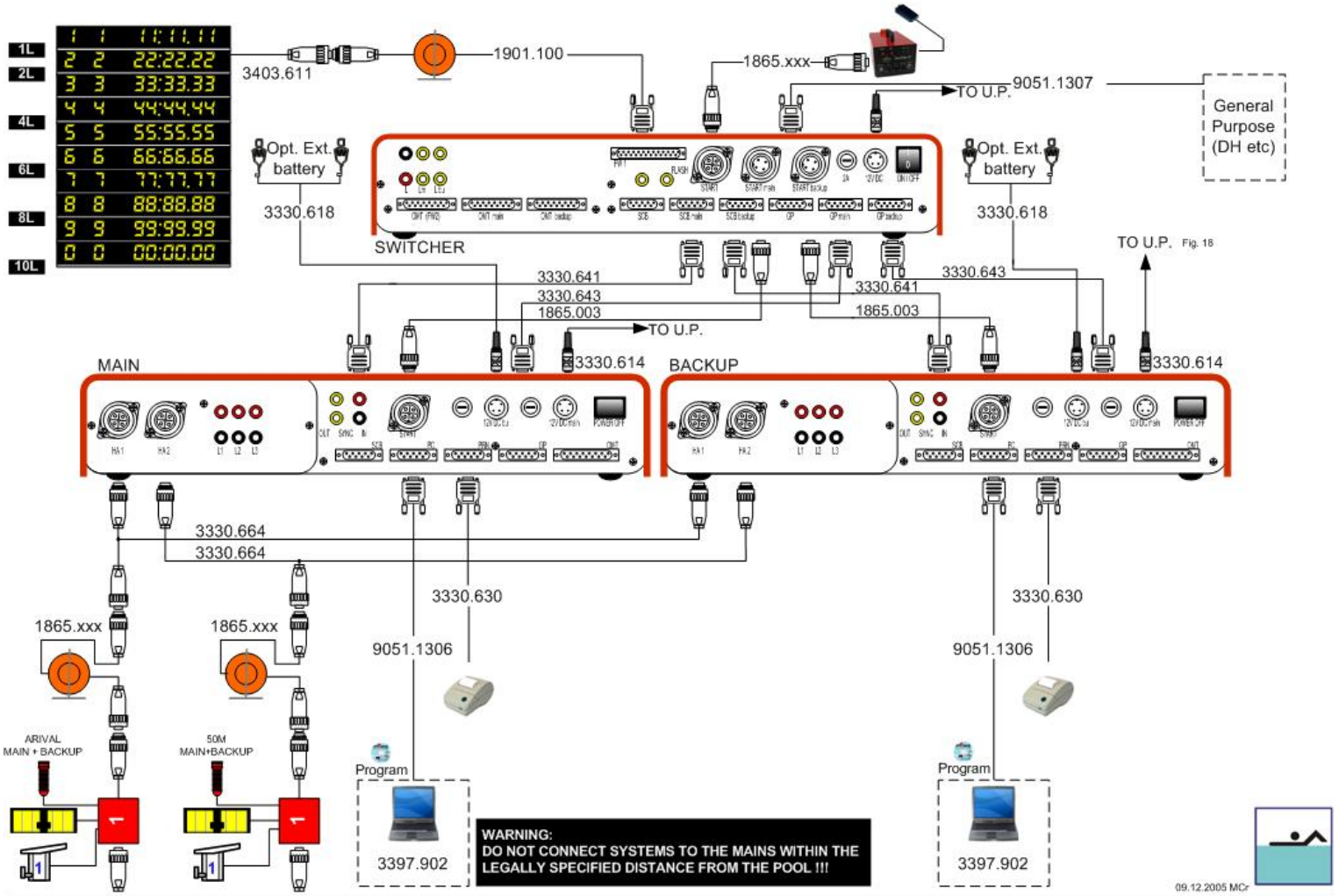

ARES 21 MOBILE SWIMMING LEVEL:OLYMPIC 3330.502 Fig. 7

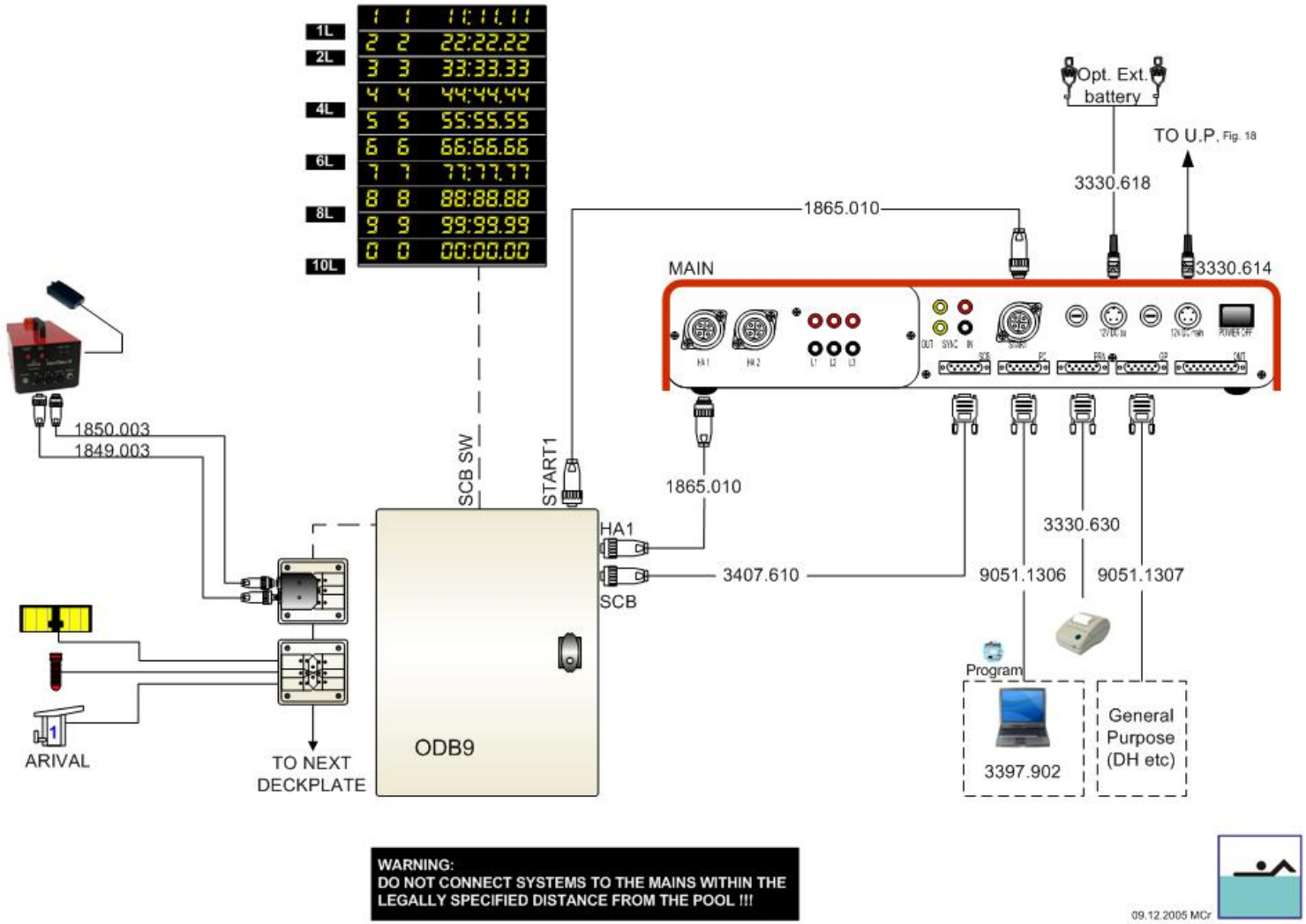

ARES 21 FIXED WIRING SWIMMING LEVEL 1(A1) 3330.502 Fig. 8

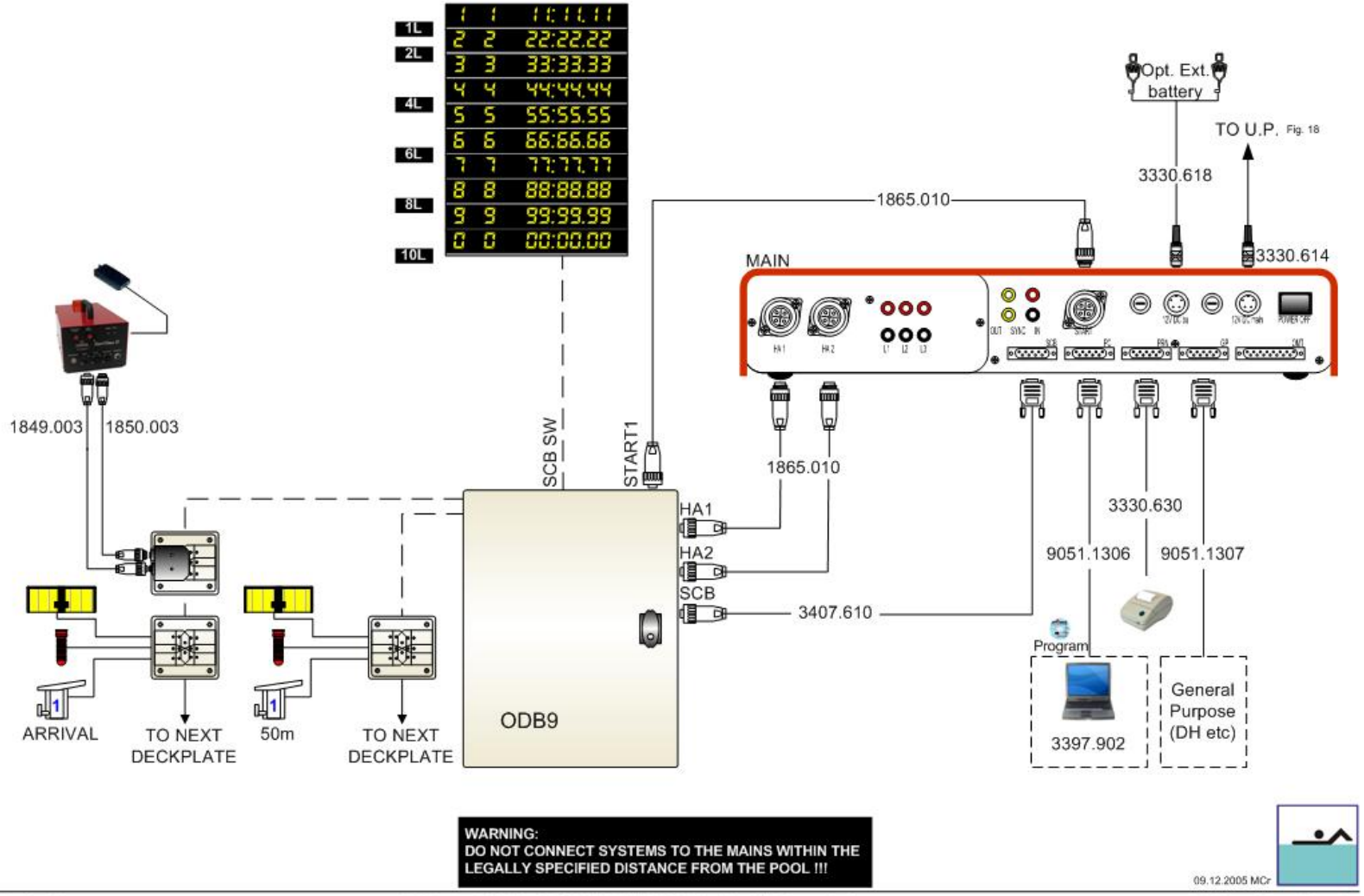

ARES 21 FIXED WIRING SWIMMING LEVEL 2(A1+50m) 3330.502 Fig. 9

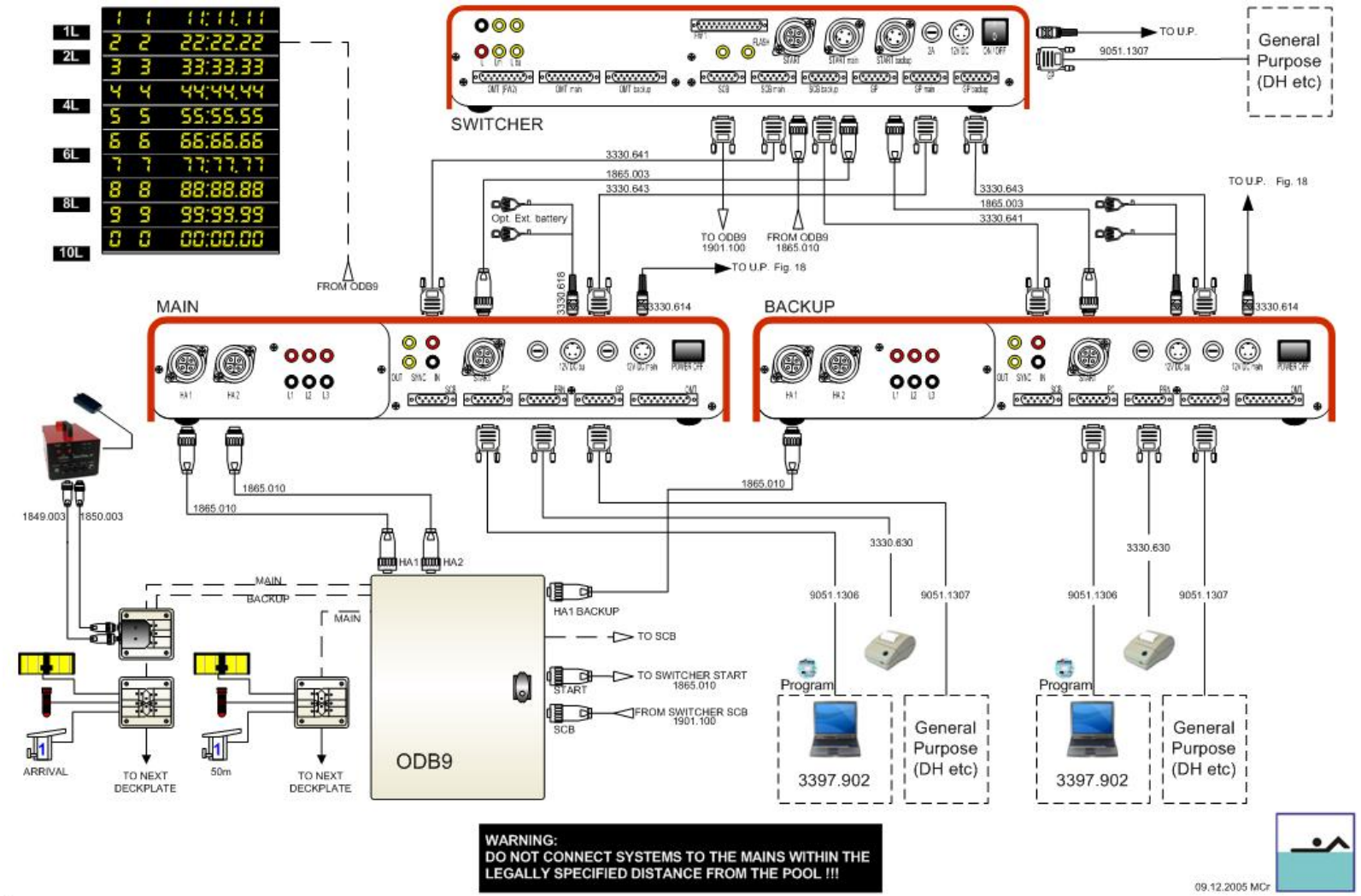

ARES 21 FIXED WIRING SWIMMING LEVEL 3(A1+A2+50m) 3330.502 Fig. 10

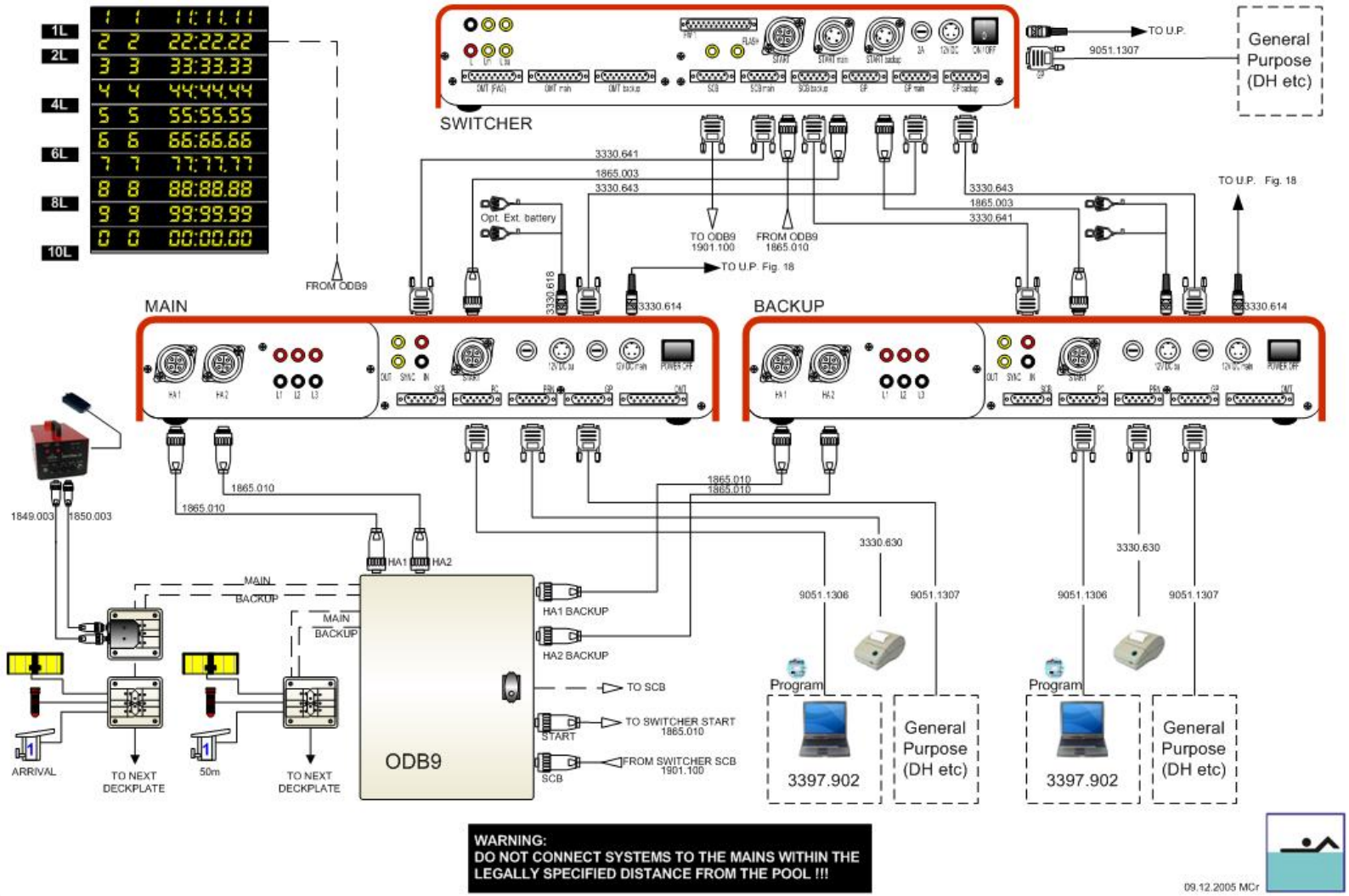

ARES 21 FIXED WIRING SWIMMING LEVEL OLYMPIC 3330.502 Fig. 11

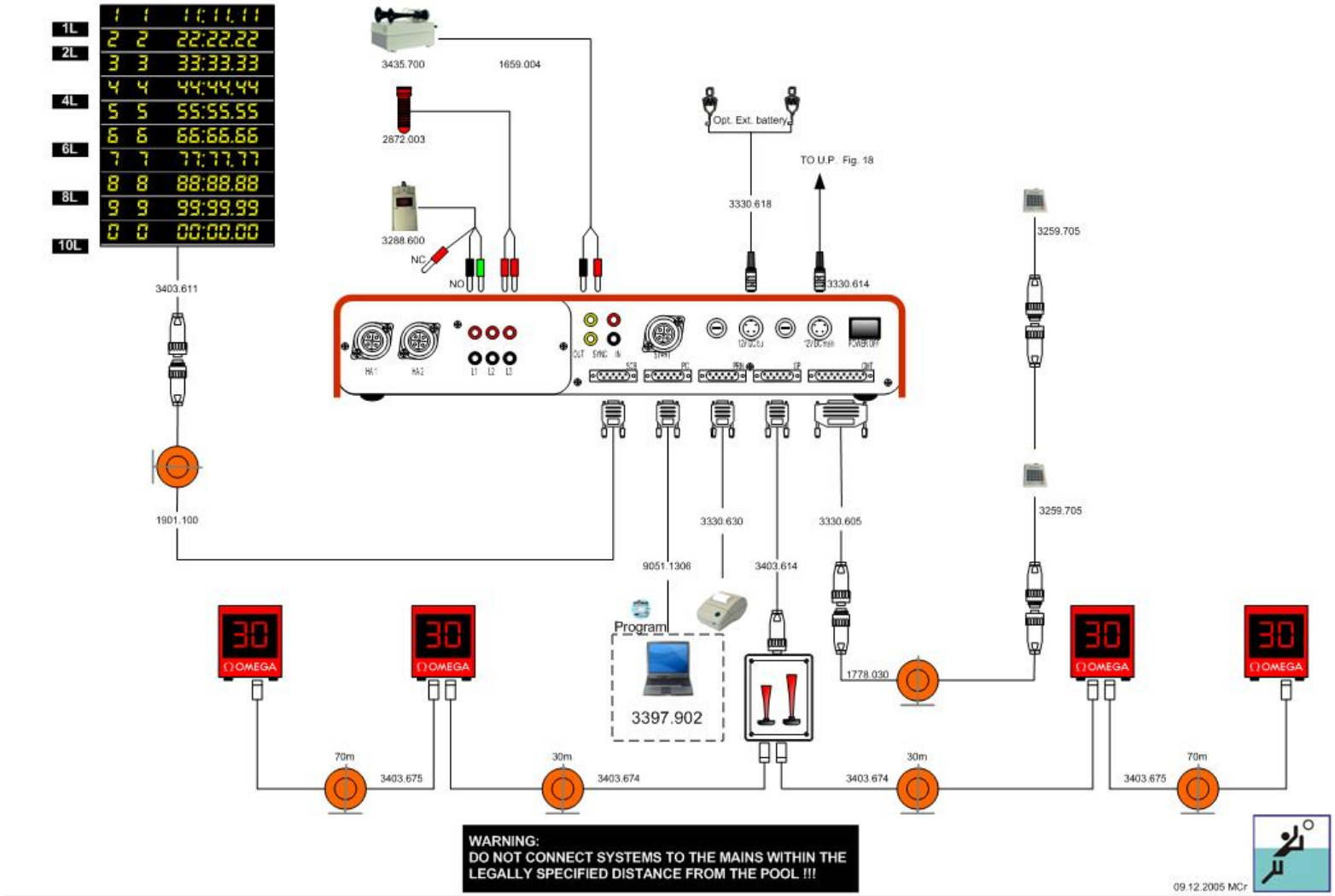

ARES 21 MOBILE WATERPOLO 3330.502 Fig. 12

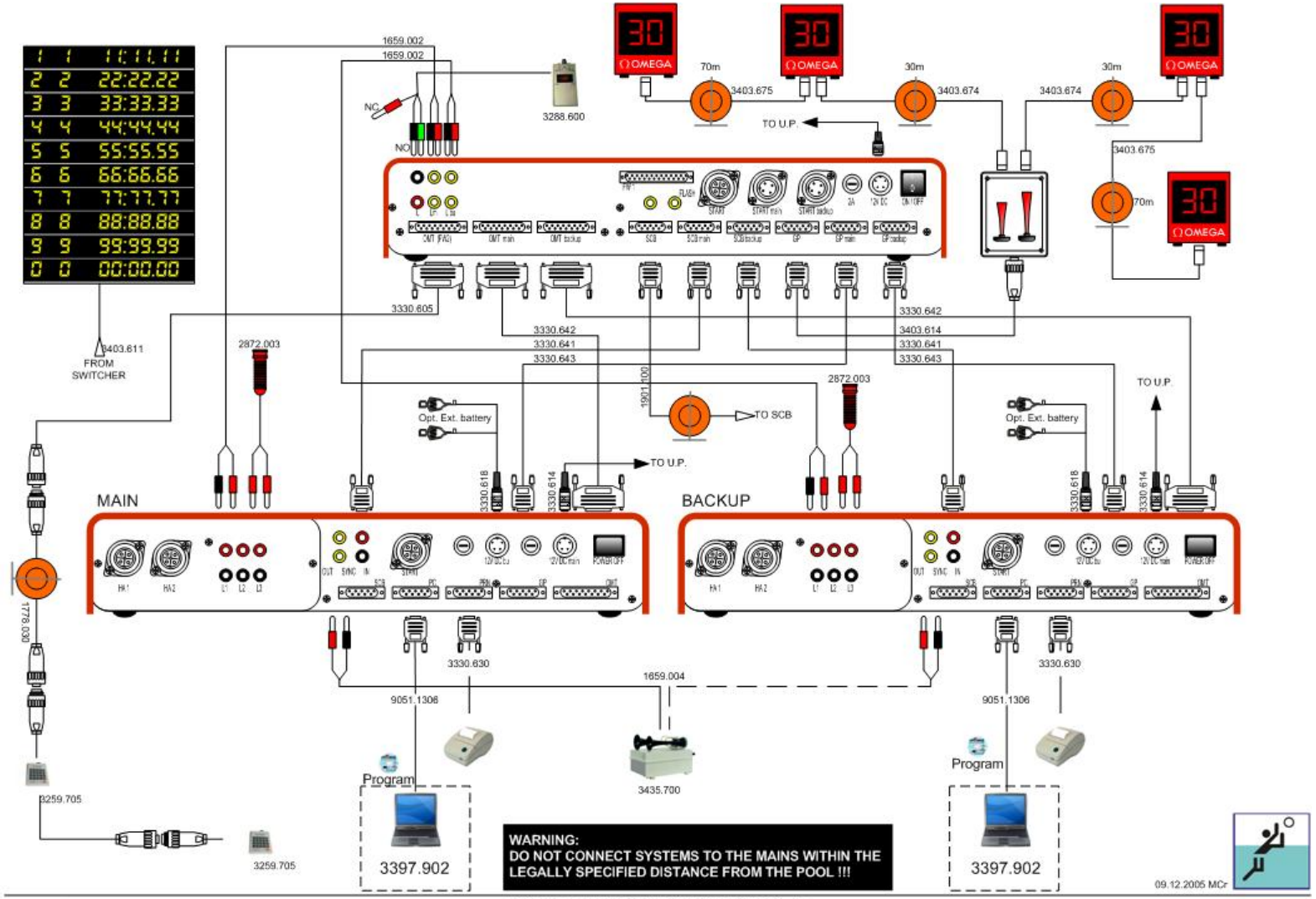

ARES 21 MOBILE BACKUP WATERPOLO 3330.502 Fig. 13

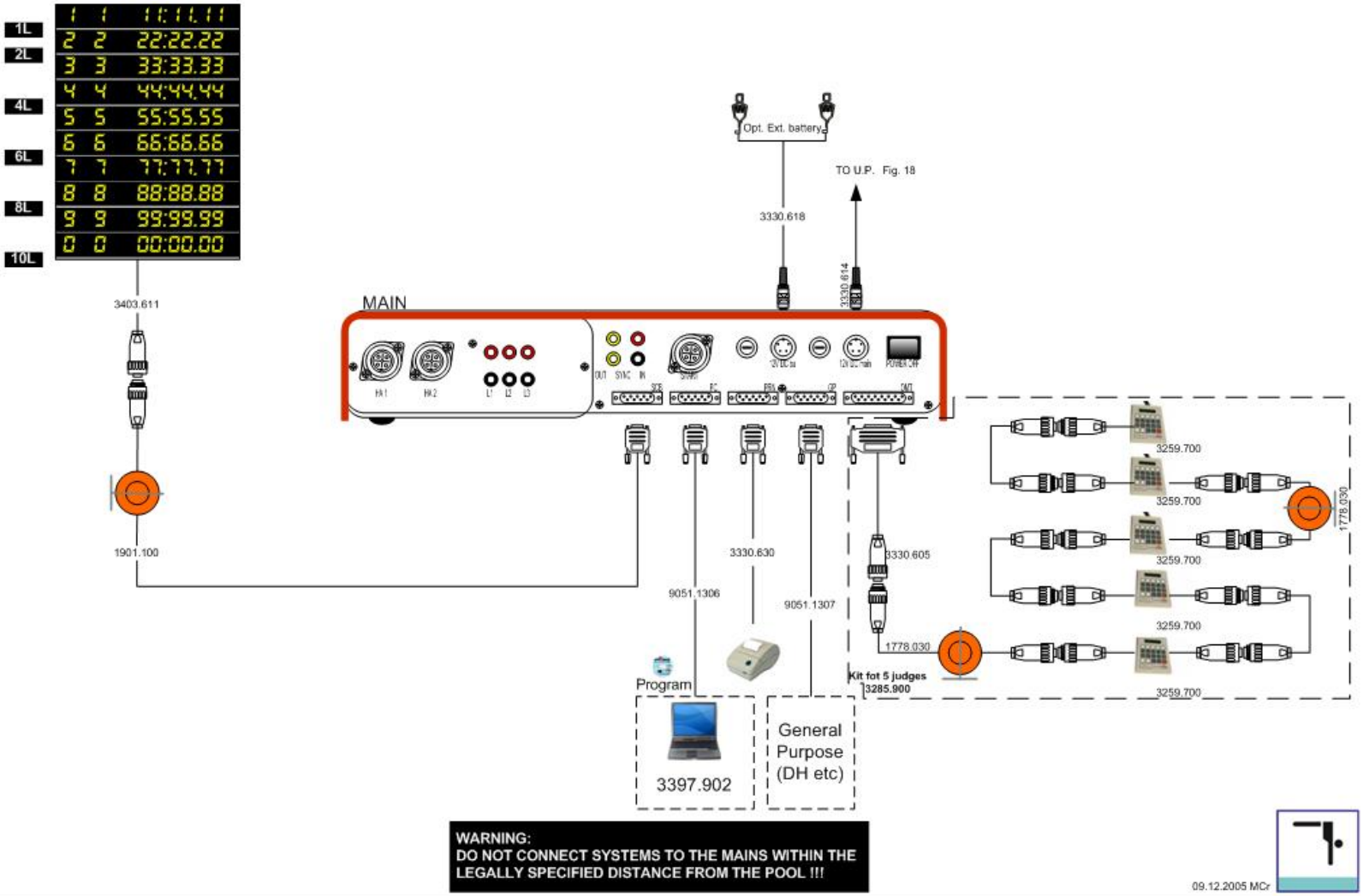

ARES 21 MOBILE DIVING 3330.502 Fig. 14

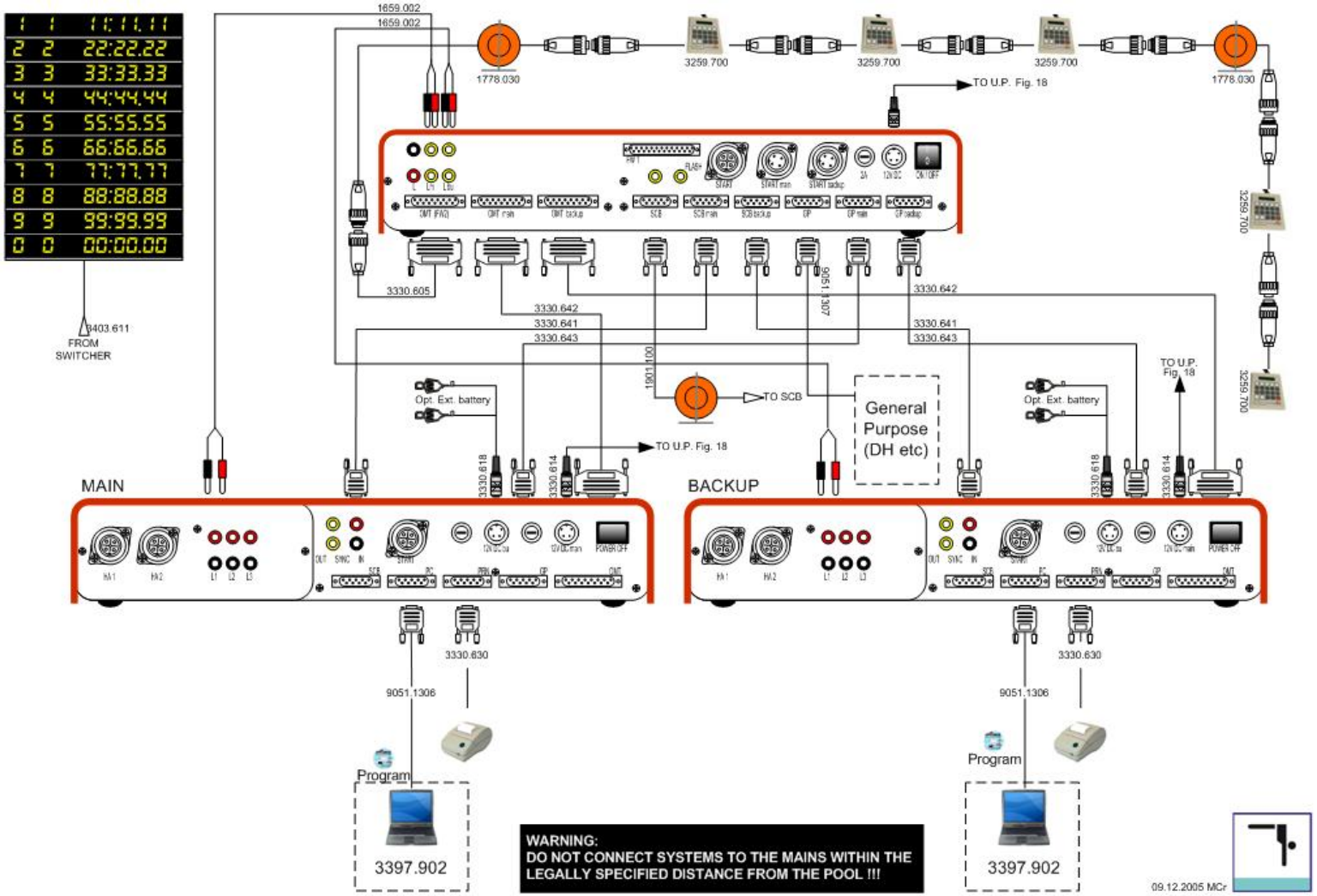

ARES 21 MOBILE BACKUP DIVING 3330.502 Fig. 15

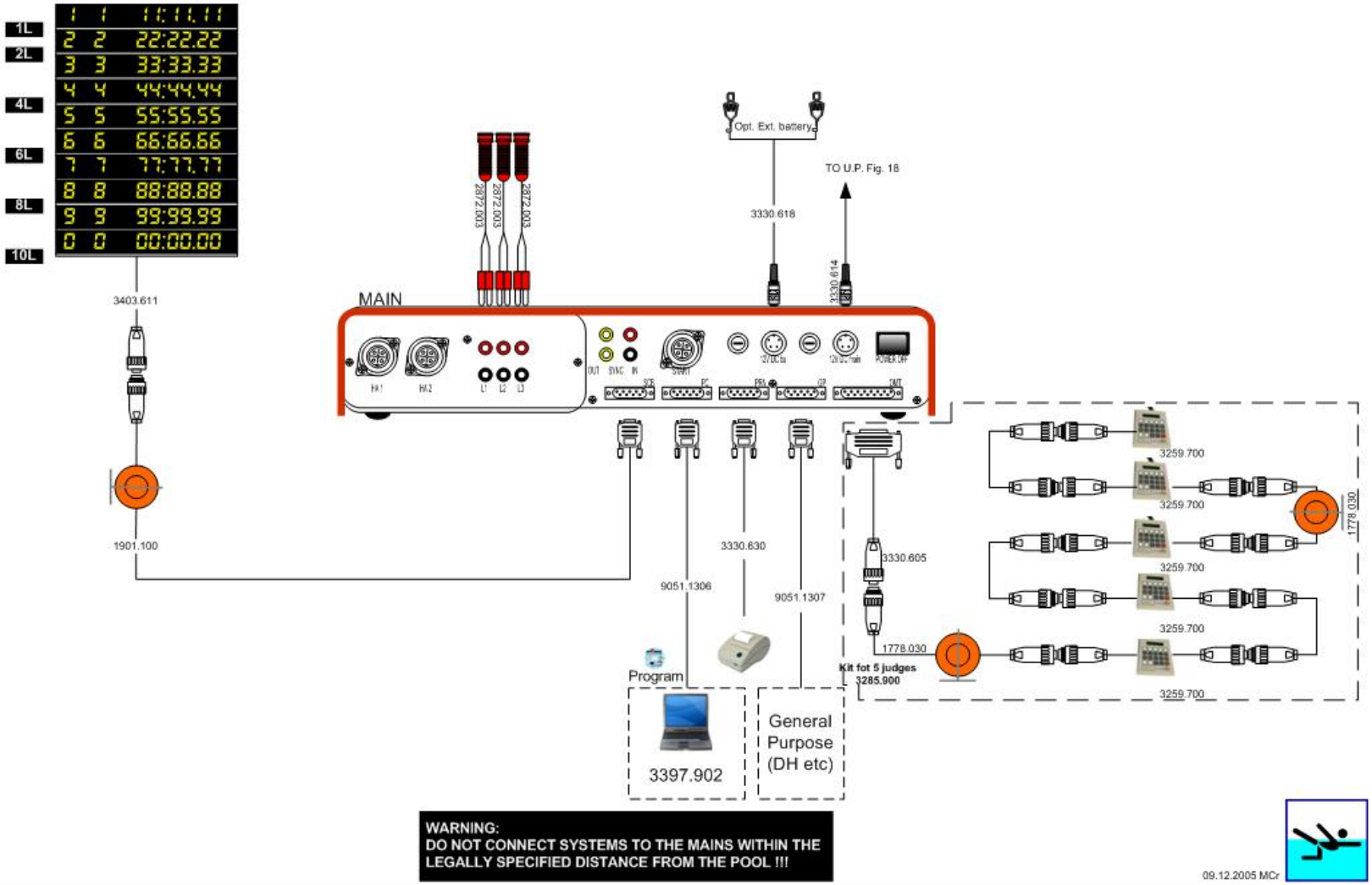

ARES 21 MOBILE SYNCHRO SWIMMING 3330.502 Fig. 16

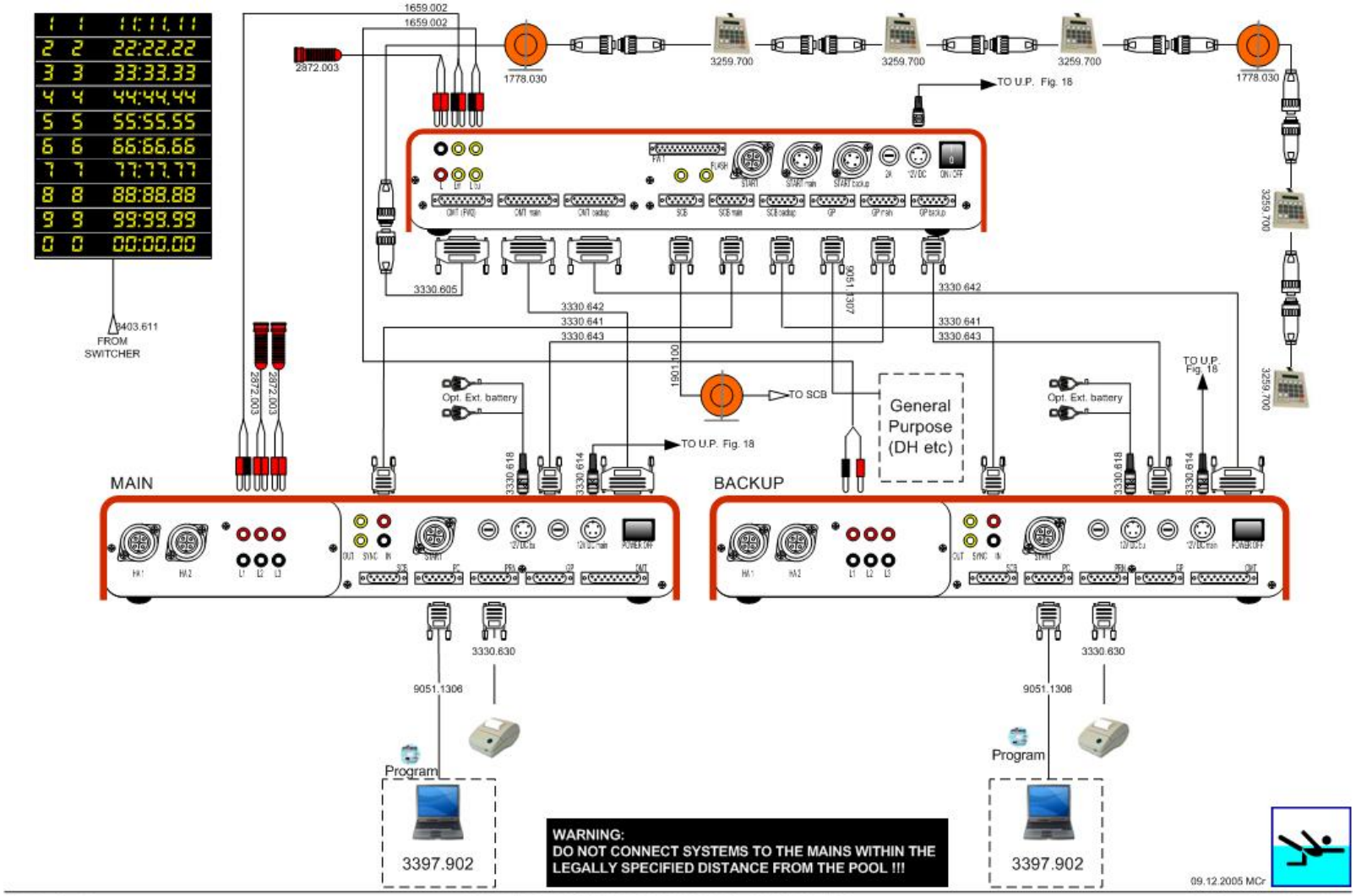

ARES 21 MOBILE BACKUP SYNCHRO SWIMMING 3330.502 Fig. 17

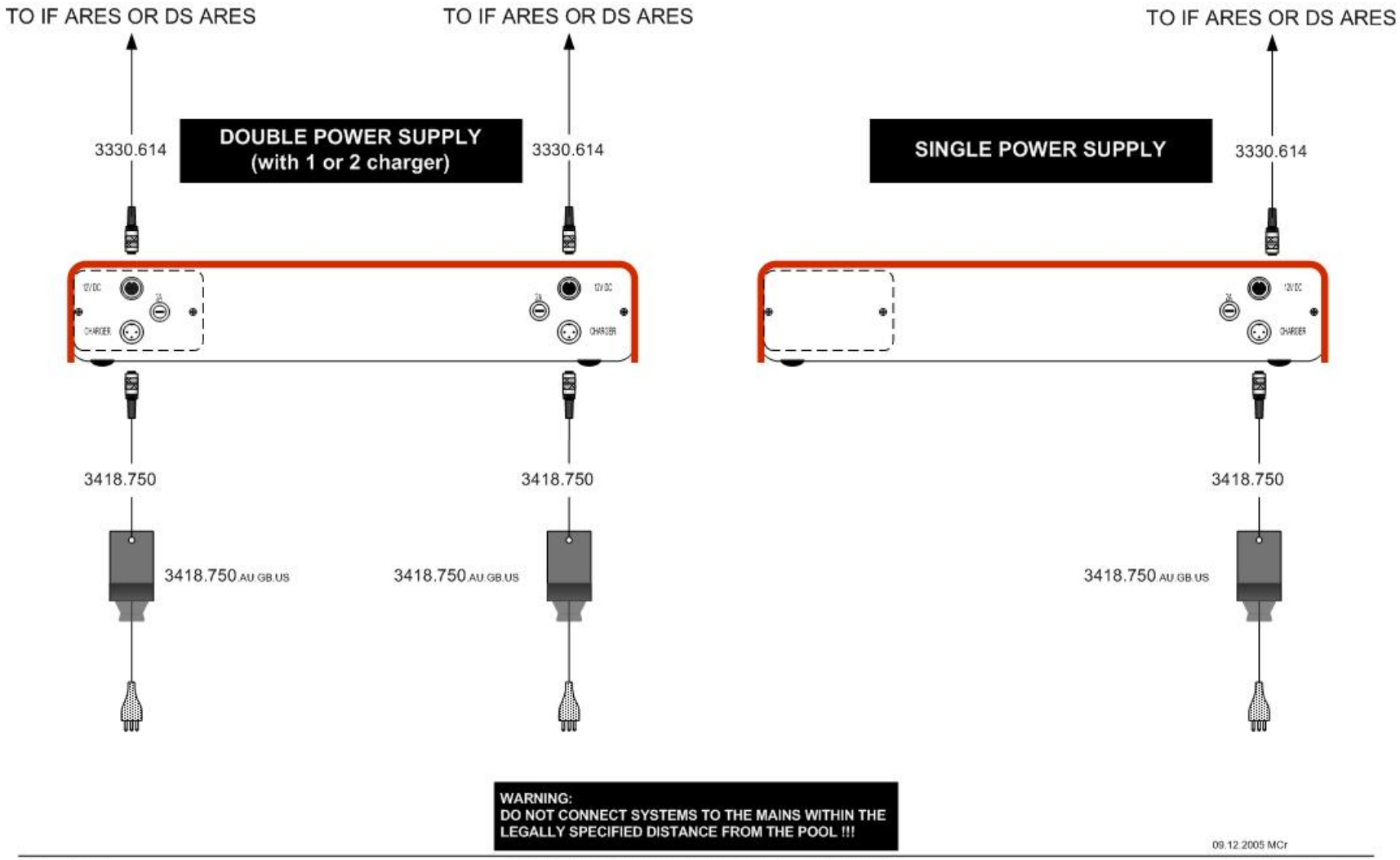

ARES 21 UNINTERRUPTABLE POWER SUPPLY 3330.502 Fig. 18

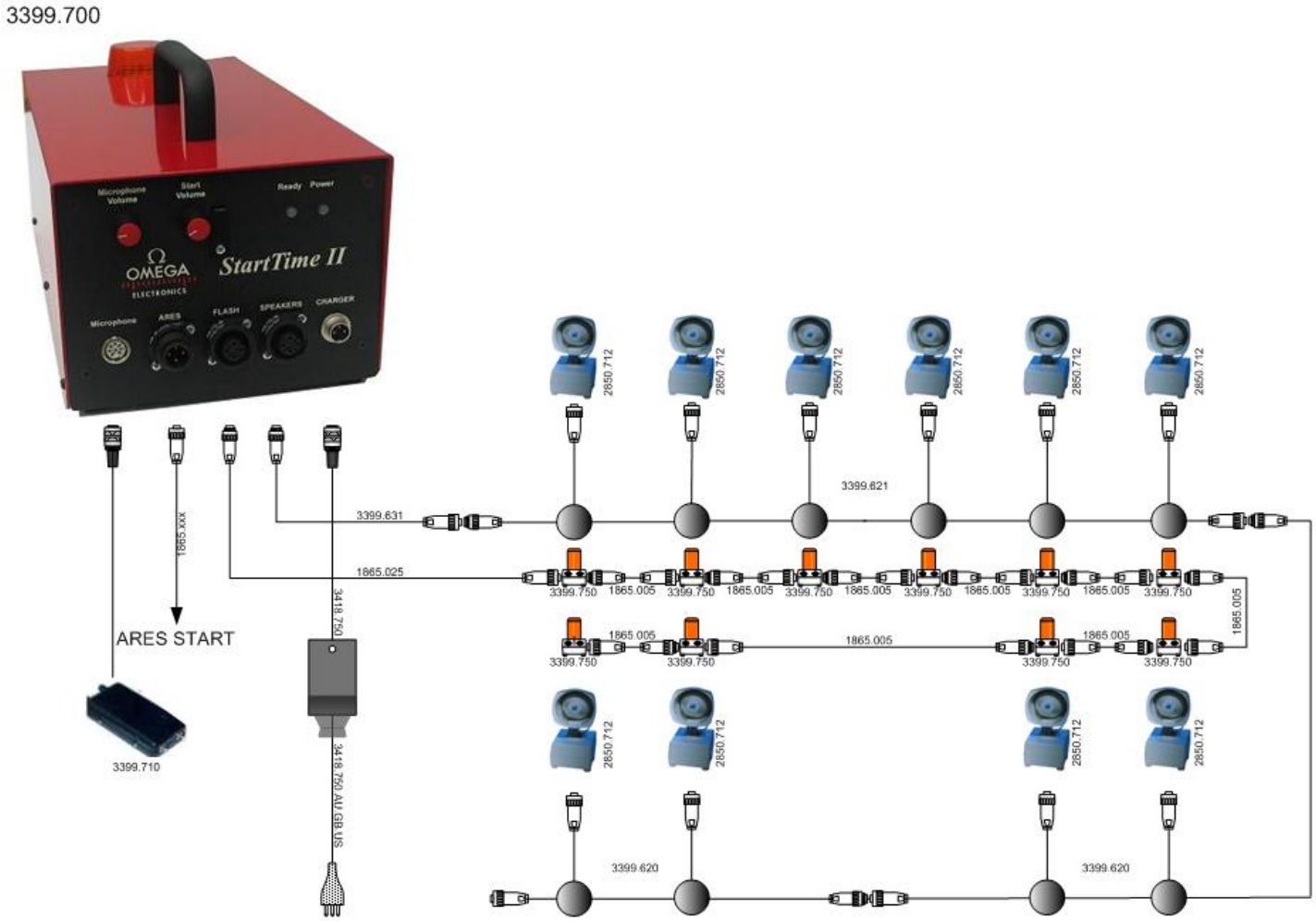

09.12.2005 MCr

ARES 21 MOBILE SWIMMING START SYSTEM 3330.502 Fig. 19

SWISS TIMING LTD
A COMPANY OF THE SWATCH GROUP

P.O. Box 138, rue de l'Envers 1
2606 Corgémont, Switzerland
www.swisstiming.com

Phone +41 32 488 36 11
Fax +41 32 488 36 09
info@swisstiming.com